# 吉生 GISON

## GP-935RD 5"/ 6" Dust Free Gear Action Sander

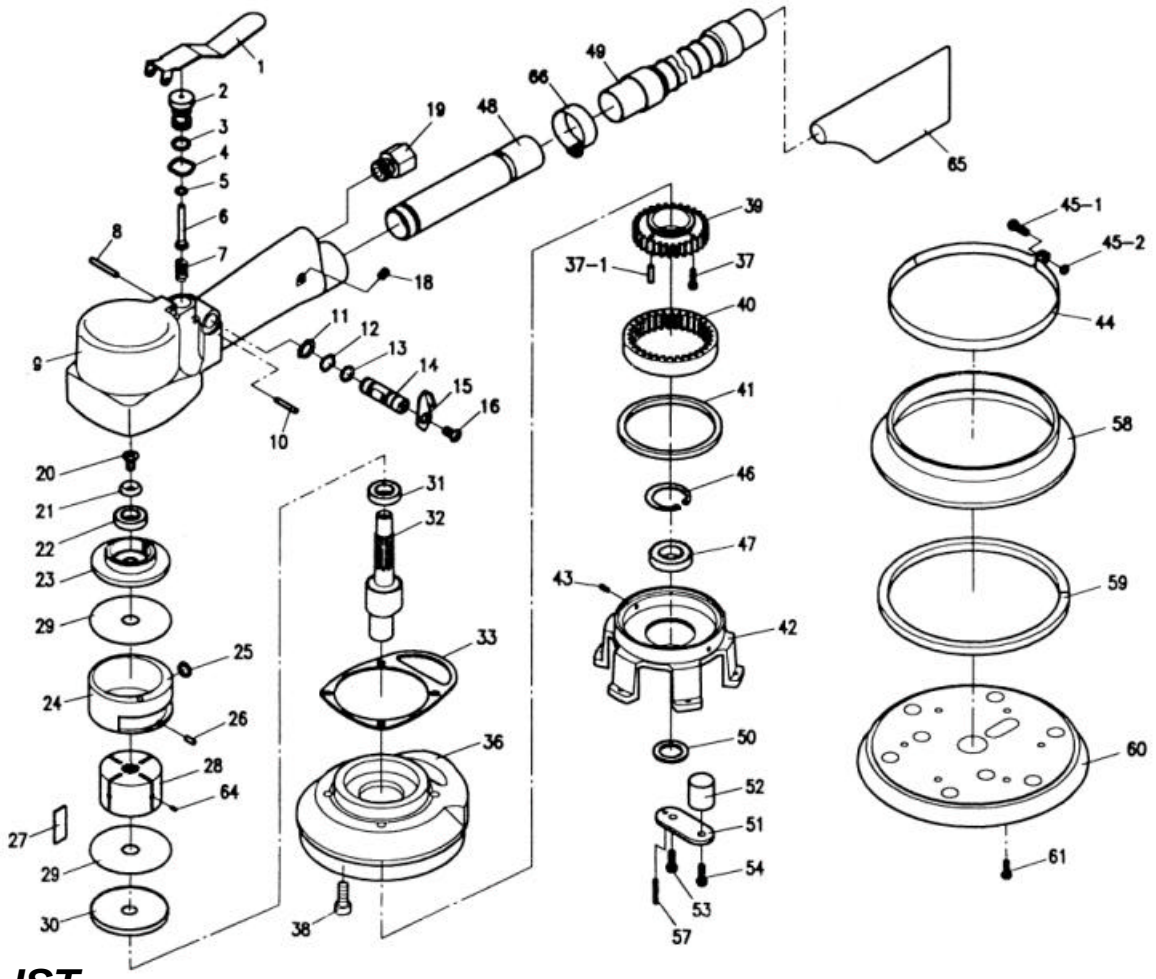


## PARTSLIST

✿ :Consuming Part

| Item No. | Part No. | Description | Qty. | Item No. | Part No. | Description | Qty. |
|---|---|---|---|---|---|---|---|
| 01 | 935RD01 | Valve Lever | 1 | 35 | 935RD35 | Screw (M6x15) | 4 |
| 02 | 935RD02 | Valve Pin Sleeve | 1 | 36 | 935RD36 | Base Ring | 1 |
| 03 | 935RD03 | O-Ring (P8) | 2 | 37 | 935RD37 | Cap Bolt (M3x10) | 2 |
| 04 | 935RD04 | Wave Washer (WW-12) | 1 | 37-1 | 935RD37-1 | Needle Ping (∅3x12) | 2 |
| 05 | 935RD05 | O-Ring (P4x∅7) | 1 | 38 | 935RD38 | Screw (M5x16) | 4 |
| 06 | 935RD06 | Valve | 1 | 39 | 935RD39 | Gear (O.D) | 1 |
| 07 | 935RD07 | Valve Spring | 1 | 40 | 935RD40 | Gear (I.D) | 1 |
| 08 | 935RD08 | Spring Pin (∅3x20) | 1 | 41 | 935RD41 | Dust Seal | 1 |
| 09 | 935RD09 | Body | 1 | 42 | 935RD42 | Lower Head | 1 |
| 10 | 935RD10 | Needle Pin (∅3x18) | 1 | 43 | 935RD43 | Set Screw (M4x6) | 2 |
| 11 | 935RD11 | Snap Ring (S-10) | 2 | 44 | 935RD44 | Skirt Band | 1 |
| 12 | 935RD12 | Wave Washer (WW-10) | 1 | 45-1 | 935RD45-1 | Screw (M4x20) | 1 |
| 13 | 935RD13 | O-Ring (P6) | 2 | 45-2 | 935RD45-2 | Nut (M4) | 1 |
| 14 | 935RD14 | Regulator | 1 | 46 | 935RD46 | Snap Ping (R-32) | 1 |
| 15 | 935RD15 | Regulator Lever | 1 | 47 | 935RD47 | Bearing (6002DU) | 2 |
| 16 | 935RD16 | Screw (M4x6) | 1 | 48 | 935RD48 | Ejector | 1 |
| 18 | 935RD18 | Set Bolt (M4x6) | 1 | 49 | 935RD49 | Duct Hose Set | 1 (set) |
| 19 | 935RD19 | 1/4" OM Nipple | 1 | 50 | 935RD50 | Spacer | 1 |
| 20 | 935RD20 | Screw (M5x10) | 1 | 51 | 935RD51 | Balancer Arm | 1 |
| 21 | 935RD21 | Conical Washer (M6) | 1 | 52 | 935RD52 | Balancer | 1 |
| 22 | 935RD22 | Bearing (6200ZZ) | 1 | 53 | 935RD53 | Screw (M5x12) | 1 |
| 23 | 935RD23 | U-Bearing Case | 1 | 54 | 935RD54 | Screw (M5x12) | 1 |
| 24 | 935RD24 | Cylinder | 1 | 57 | 935RD57 | Spring Pin (∅3x8) | 1 |
| 25 | 935RD25 | O-Ring (P6) | 1 | 58 | 935RD58 | Skirt | 1 |
| ✿ 26 | 935RD26 | Spring Pin (∅3x 5) | 1 | 59 | 935RD59 | Dust Seal | 1 |
| 27 | 935RD27 | Vane | 4 | 60-1 | 935RD60-1 | Pad (LP) | 1 |
| 28 | 935RD28 | Rotor | 1 | 60-2 | 935RD60-2 | PAD (MP) | |
| 29 | 935RD29 | Side Plate | 2 | 61 | 935RD61 | Cap Bolt (M4x10) | 6 |
| 30 | 935RD30 | L-Bearing Case | 1 | 64 | 935RD64 | Vane Spring | 4 |
| 31 | 935RD31 | Bearing (6201ZZ) | 1 | 65 | 935RD65 | Bag | 1 |
| 32 | 935RD32 | Rotor Shaft | 1 | 66 | 935RD66 | Hose Clamps (1-1/2") | 1 |
| 33 | 935RD33 | Body Gasket | 1 | | | | |