吉生 GISON

GP-848T1 Air Body Saw

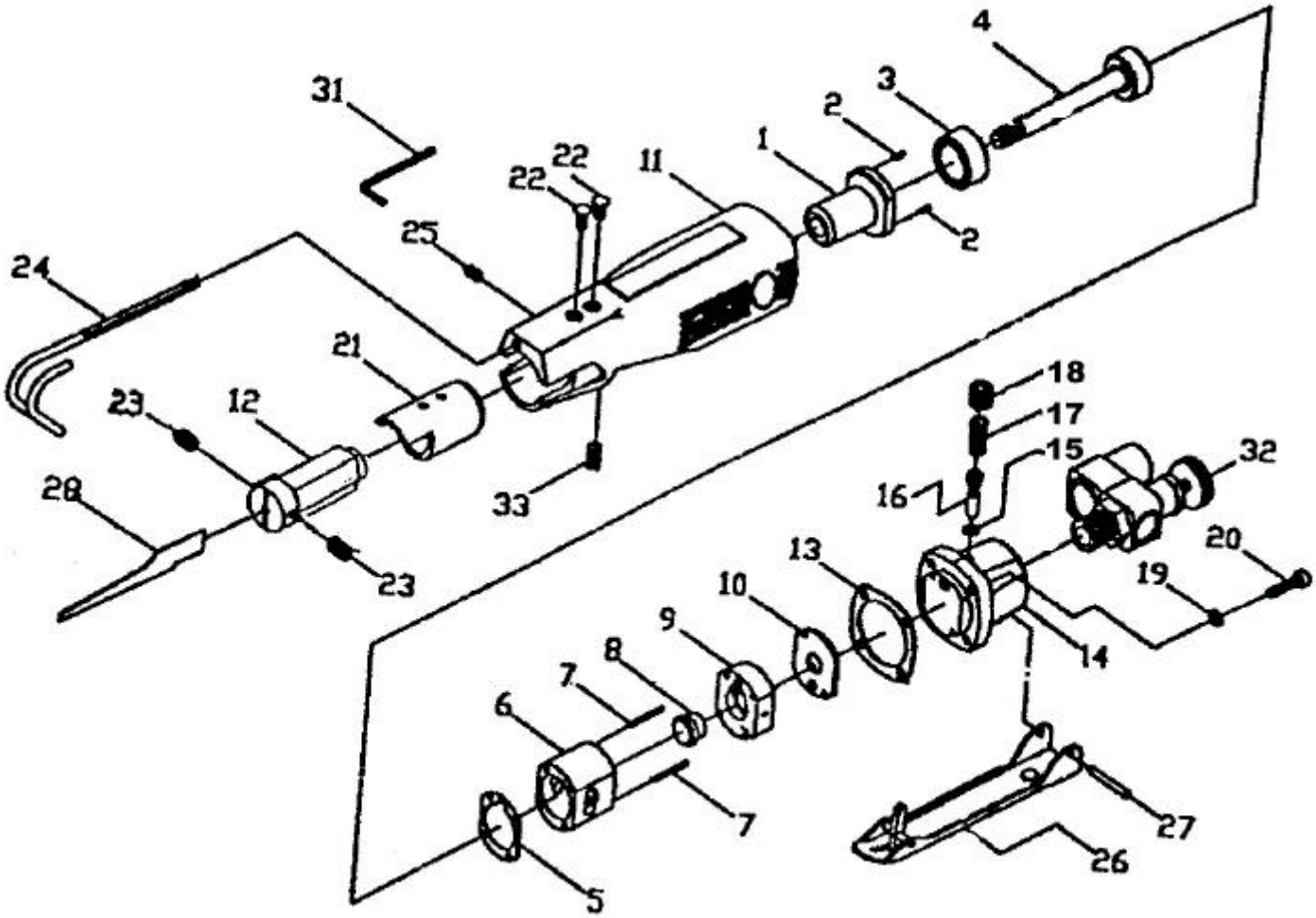

PARTS LIST

✿ :Consuming Part

Item No.	Part No.	Description	Qty.	Item No.	Part No.	Description	Qty.
1	848F101	Cylinder Head Ass'Y	1	18	848F118	Plug Screw	1
2	848F102	Fronf Dowel Pin	2	19	848F119	Spring Washer	4
3	848F103	Bumper	1	20	848F120	Screw	4
4	848F104	Piston Ass'Y	1	21	848F121	Sliding Liner	1
5	848F105	Gasket	1	22	848F122	Pan Screw	2
6	848F106	Cylinder	1	23	848F123	Set Screw	3
7	848F107	Rear Dowel Pin	2	24	848F124	Holder	1
8	848F108	Automatic Valve	1	25	848F125	Set Screw	1
9	848F109	Valve Chest	1	26	848F126	Saftey Lever Ass'Y	1
10	848F110	Valve Seat	1	27	848F127	Roll Pin	1
11	848F111	Handle (Y)	1	28	848F128A	Saw Blade-18t	1
12	848F112	Blade Holder Ass'Y	1		848F128B	Saw Blade-24t	1
13	848F113	Rubber Gasket	1		848F128C	Saw Blade-32t	1
14	848F114	Throttle Valve Case	1	30	848F130	3mm Hex Wrench	1
15	848F115	O-Ring, Valve Stem	1	31	848F131	2mm Hex Wrench	1
16	848F116	Valve Stem	1	32	848F132	Swivel Joint W/Regulator	1
17	848F117	Spring	1	33	848F133	Set Screw	1